Iowa Department of Transportation

TRAFFIC FLOW MAP OF

BIRMINGHAM

VAN BUREN COUNTY

1998 ANNUAL AVERAGE DAILY TRAFFIC

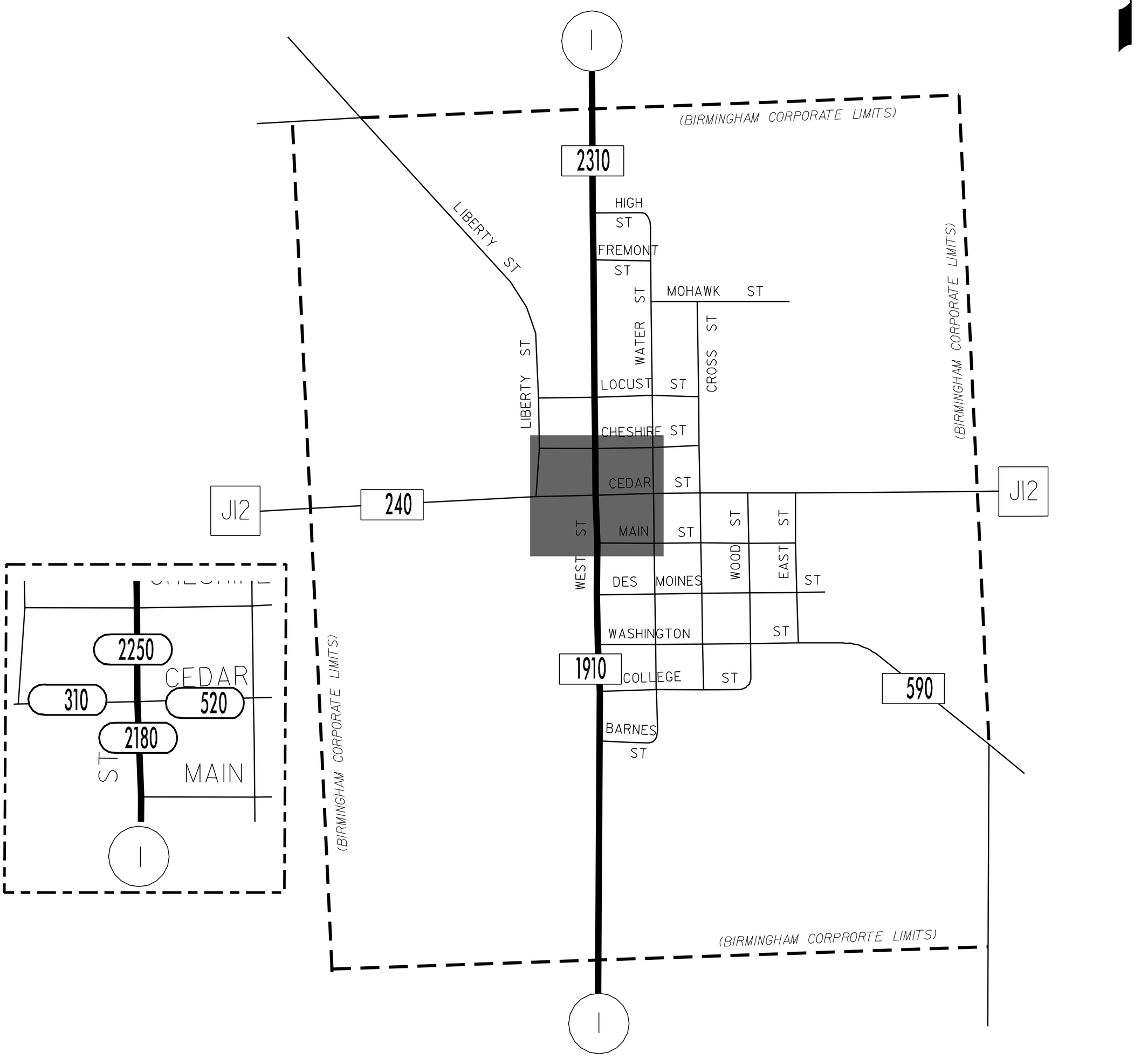

PREPARED BY

IOWA DEPARTMENT OF TRANSPORTATION

DIVISION OF PLANNING AND PROGRAMMING

OFFICE OF TRANSPORTATION DATA

PHONE (515) 239–1282

LEGEND

RECORDER ONLY

MANUAL COUNT